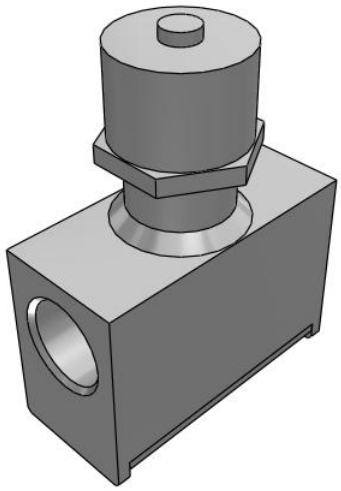

In-line - AS*000
AS5000-04

Datasheet

General series information

- Port Size: M3, M5, 1/8, 1/4, 3/8, 1/2
- Operating Pressure Range: 0.05 to 1 MPa.

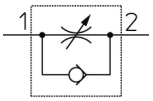

Flow control valve, adjustable, with reverse free flow

Standard specifications

Size	5 (3/4 Basis)
Thread	Rc (Metric Thread, M3, M5)
Port Size	04 (1/2)
Option	None
Lock Nut	Standard (Hexagon)
Pressure medium	Air
Maximum operating pressure	1 MPa
Minimum operating pressure	0.05 MPa
Proof pressure	1.5 MPa
Maximum ambient temperature	60 C
Minimum ambient temperature	-5 C
Weight	0.224 Kg

Specifications are subject to change without prior notice and any obligation on the part of the manufacturer.

SMC CORPORATION Zuazobidea 14, 01012, Vitoria-Gasteiz, Álava +34 945184100 +34 945184126 www.smc.eu emcmarketing@smc.smces.es

Dimensions

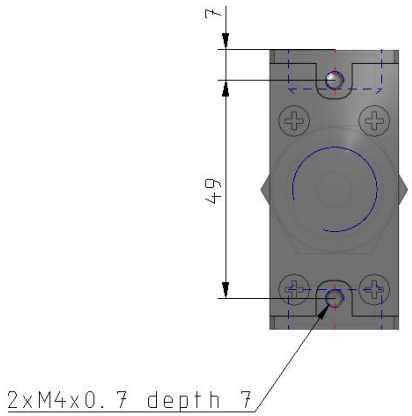

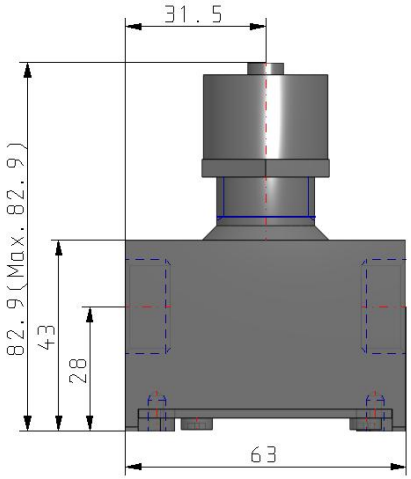

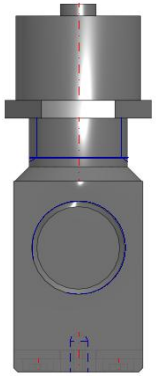

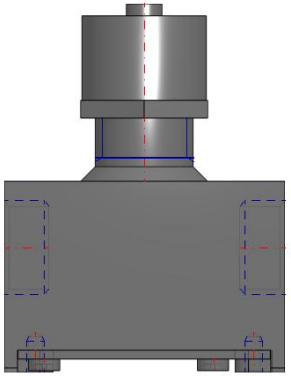

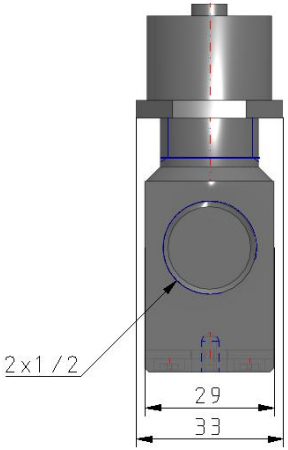

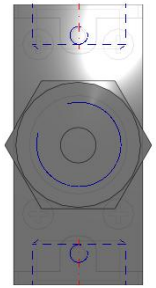

Specifications are subject to change without prior notice and any obligation on the part of the manufacturer.

SMC CORPORATION Zuazobidea 14, 01012, Vitoria-Gasteiz, Álava +34 945184100 +34 945184126 www.smc.eu emcmarketing@smc.smces.es

Constructions

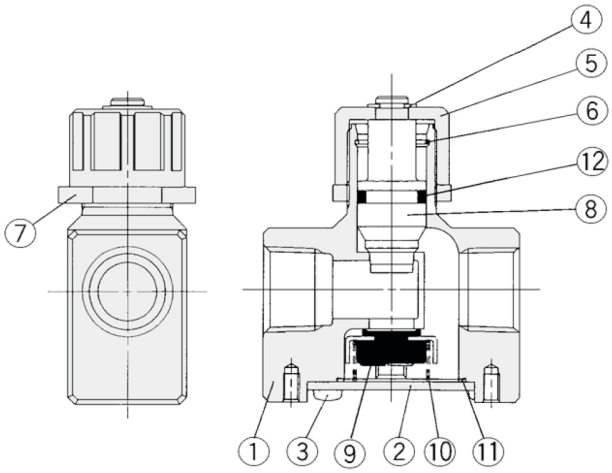

Component Parts

No.	Description	Material	Note
①	Body	Aluminum alloy	Chromated
②	Cap	Rolled steel	Nickel plated
③	Head cap screw	Steel wire	M4 X 8 Nickel plated
④	E type snap ring	Stainless steel	JIS B 2805 Nominal 6
⑤	Handle	Zinc alloy	Chromated
⑥	Ring	Stainless steel	
⑦	Lock nut	Zinc alloy	Chromated
⑧	Needle	Aluminum alloy	Chromated
⑫	O ring	NBR	JIS B2401 P12

No.	Description	Material
⑨	Valve	NBR, Stainless steel
⑩	Spring	Stainless steel
⑪	Packing	NBR

Specifications are subject to change without prior notice and any obligation on the part of the manufacturer.

SMC CORPORATION Zuazobidea 14, 01012, Vitoria-Gasteiz, Álava +34 945184100 +34 945184126 www.smc.eu emcmarketing@smc.smces.es

Additional information

Catalogue	AS_000-A_EU.pdf
Operation manuals	OM_ASx000_OMA0069EN-E.pdf

Specifications are subject to change without prior notice and any obligation on the part of the manufacturer.

SMC CORPORATION Zuazobidea 14, 01012, Vitoria-Gasteiz, Álava +34 945184100 +34 945184126 www.smc.eu emcmarketing@smc.smces.es