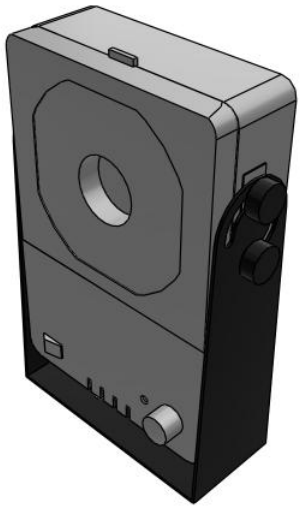

IZF21/31, Ionizer, Fan Type
IZF21-P-B

Datasheet

General series information

- Slim design.
- Offset voltage (Ion balance): ±5 V.
- Rapid static neutralization: 0.5 seconds.
- Flow Rate Adjustment Function.
- Filter.

Standard specifications

Model	21 (1.8 m³/min)
Input/Output	P (PNP, Input/Output)
Power Supply Cable, AC Adapter	w/Power Supply Cable, 3m
Bracket	B (With bracket)
Automatic Cleaning Unit, Louver	None
Filter	None
Maximum ambient temperature	50 ºC
Minimum ambient temperature	0 ºC
General power supply	24 VDC ±10 %
Conform to the European RoHS Directive	Conform
Approvals	CE, UKCA
Current consumption	90 mA
Material	Case: ABS/PBT/Stainless steel Emitter: Tungsten
Ion generation method	Corona discharge
Method of applying voltage	DC
Applied voltage	±5 kV
Ambient humidity	35 to 80 % RH (No condensation)
Offset voltage	±5 V

Specifications are subject to change without prior notice and any obligation on the part of the manufacturer.

SMC CORPORATION Zuazobidea 14, 01012, Vitoria-Gasteiz, Álava +34 945184100 +34 945184126 www.smc.eu emcmarketing@smc.smces.es

Weight	0.576 Kg

Technical information graphs

Installation distance and discharge time

IZF21

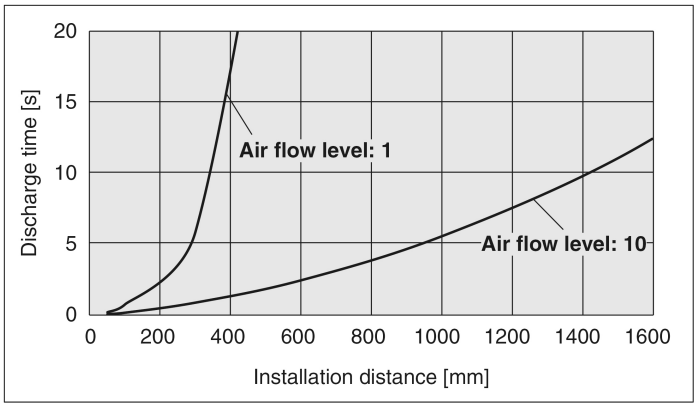

Specifications are subject to change without prior notice and any obligation on the part of the manufacturer.

SMC CORPORATION Zuazobidea 14, 01012, Vitoria-Gasteiz, Álava +34 945184100 +34 945184126 www.smc.eu emcmarketing@smc.smces.es

Dimensions

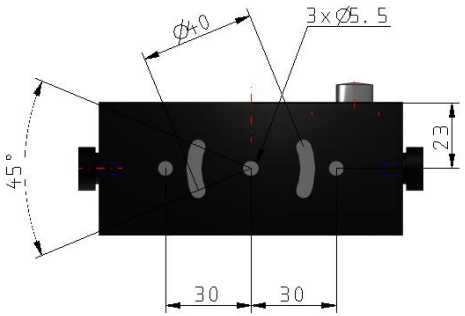

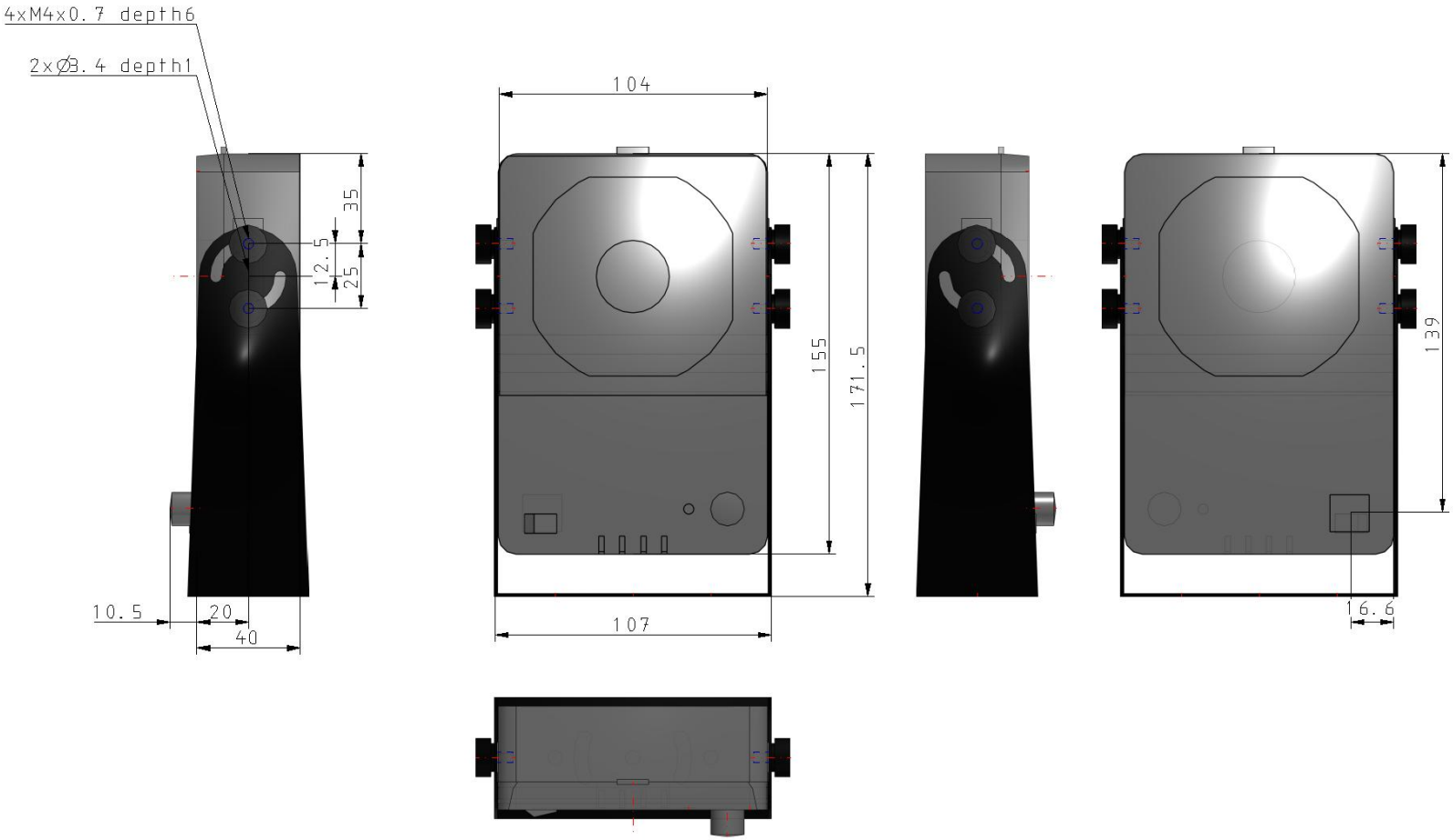

Specifications are subject to change without prior notice and any obligation on the part of the manufacturer.

SMC CORPORATION Zuazobidea 14, 01012, Vitoria-Gasteiz, Álava +34 945184100 +34 945184126 www.smc.eu emcmarketing@smc.smces.es

Additional information

Catalogue	IZF-C_EU.pdf
Declaration of conformity	newDoC_IZF21_31_TF1V244EN.pdf DoC_IZF21-31_TDS0032.pdf newDoC_IZF21-31_TF122009EN.pdf newDoC_IZF-HS_TF1B245EN.pdf DoC_IZF21-31_TDS0031.pdf
Installation manuals	IM_IZF21-31_TF2Z270EN.pdf
Operation manuals	OM_IZF21-31_OMR0035EN.pdf

Specifications are subject to change without prior notice and any obligation on the part of the manufacturer.

SMC CORPORATION Zuazobidea 14, 01012, Vitoria-Gasteiz, Álava +34 945184100 +34 945184126 www.smc.eu emcmarketing@smc.smces.es